Model No. DDF083 CORDLESS DRIVER DRILL

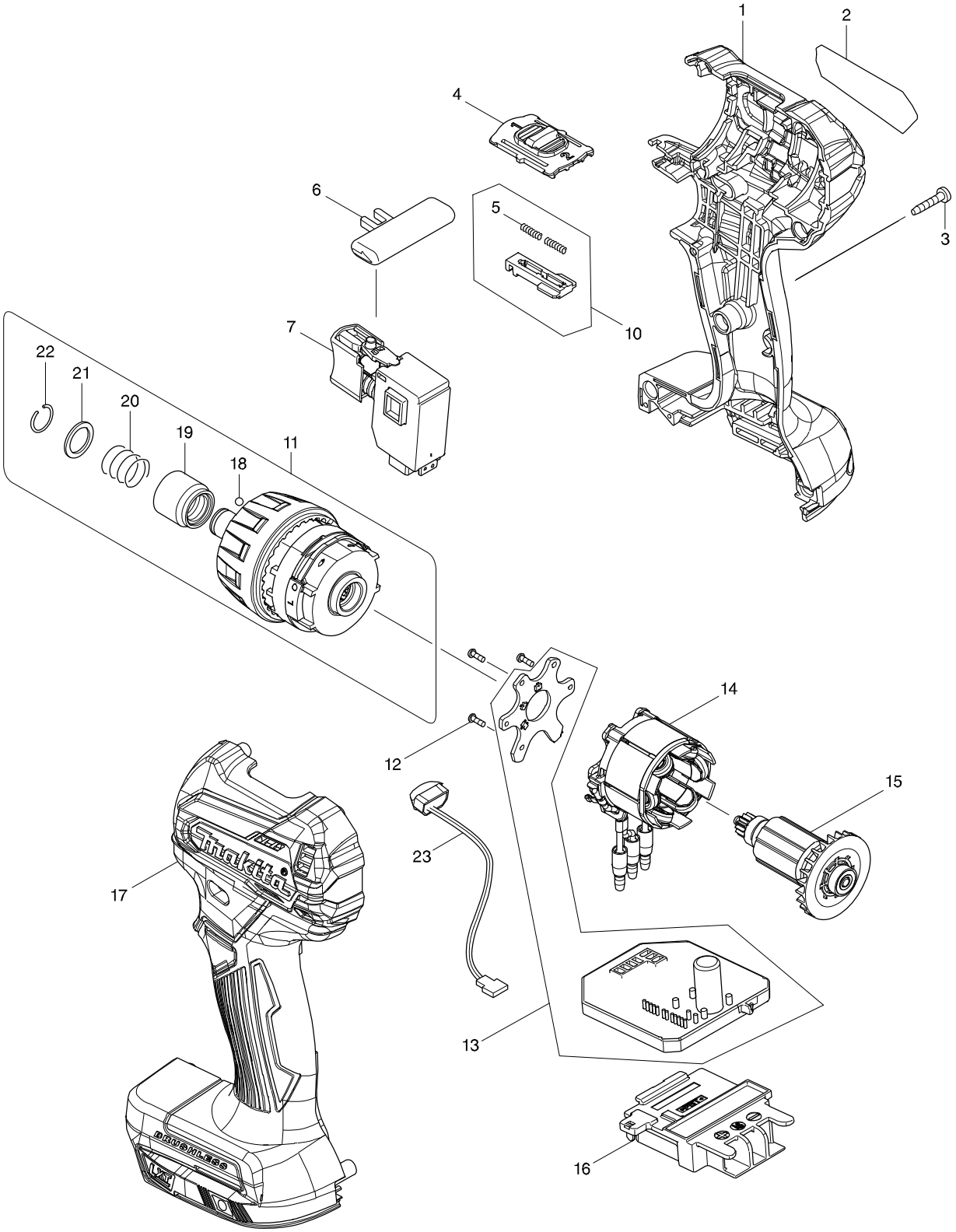

Model No. DDF083 CORDLESS DRIVER DRILL

Item	Parts No.	Description	I/C	Qty	N/O	Opt. 1	Opt. 2	Note
001	183E19-5	HOUSING SET		1				
C10	263005-3	RUBBER PIN 6		2				
C20	252126-6	HEX. LOCKING NUT M4-7		2				
D10		INC. 17						
002	852M58-1	DDF083 NAME PLATE		1				
003	266429-2	TAPPING SCREW 3X16		8				
004	457020-9	SPEED CHANGE LEVER		1				
005	233025-1	COMPRESSION SPRING 2		2				
006	419041-9	F/R CHANGE LEVER		1				
007	650689-0	SWITCH C3JW-2B		1				
010	123587-6	CHANGE LEVER ASS'Y		1				
D10		INC. 5						
011	123869-6	GEAR ASSEMBLY		1				
D10		INC. 18-22						
012	266490-9	TAPPING SCREW PT 2X6		3				
013	620555-5	CONTROLLER		1				
014	629228-7	STATOR		1				
015	619410-6	ROTOR		1				
016	643874-2	TERMINAL		1				
017	183E19-5	HOUSING SET		1				
C10	263005-3	RUBBER PIN 6		2				
C20	252126-6	HEX. LOCKING NUT M4-7		2				
D10		INC. 1						
018	216019-1	STEEL BALL 3		2				
019	326677-6	BIT SLEEVE		1				
020	233005-7	COMPRESSION SPRING 13		1				
021	347004-4	BIT WASHER		1				
022	231965-7	RING SPRING 10		1				
023	620549-0	LED CIRCUIT		1				
A01	251314-2	+ SCREW M4X12		1				
A02	346317-0	HOOK		1				
A03	784202-3	PHILLIPS BIT 2-45		1				
A04B	141856-3	PLASTIC CARRYING CASE COMPLET		1				
C10	162302-3	LATCH		2				
A04C	141856-3	PLASTIC CARRYING CASE COMPLET		1				
C10	162302-3	LATCH		2				
A05B	450128-8	BATTERY COVER		1				
A05C	450128-8	BATTERY COVER		1				
A06B	***DC18RC	DC18RC FAST CHARGER		1				
D10		COMPO-PARTS						
A06C	***DC18RC	DC18RC FAST CHARGER		1				
D10		COMPO-PARTS						
A07B	197600-6	BATTERY BL1830B SET		2				
A07C	197280-8	BATTERY BL1850B SET		2				

Please order the parts with a part number.

Print Date 20/12/2016